Brunswick Symmetry, Complexity, and Non-Quantitative Psychology

The theory behind the concept of Good Judgment, why the Two Big Ideas presentation is more subtle than it appears at first glance, and why psychology might be for all intents and purposes, a non-quantitative science.

Well, if you were to read the presentation notes/papers or sit through the two presentations themselves (Good Judgment and Two Big Ideas) then I suspect the impression you come away with is "Interesting material and ideas but what is the significance of any of this?".

The problem is, up until 2am the morning of the presentations, I was also thinking this. Lots of interesting and thoughtful stuff – some useful references – and some grand themes – but it all seemed so disjointed. Yes, "Good Judgment", "Getting Along", "Getting Ahead". "Intelligence", and even "Leadership" all sound fine and dandy, and seem to make a good deal of sense when we talk about them to ourselves and to clients, and even to other psychologists. But, these are not "measurable" constructs/concepts in the accepted sense of the word "measurement" – in that measurement implies a quantitative structure for a variable (i.e. think "length"). As I noted in the Good Judgment presentation, Jensen, Hunt, and Carlson have all discarded the notion that something like "intelligence" is defined well enough for it to be treated as a "psychometric" variable.

Yet, a nagging suspicion remains. When psychologists, even those who might call themselves "quantitative" talk to others about their measured constructs, especially clients who need to make decisions in the real world, then that conversation is always in terms of qualities and orders of magnitudes. No-one for example talks about the behavioral or cognitive differences between a latent variable mental ability score of 2.78 and 2.94, or scaled IQ of 112 and 118. That's because like you and me, they don't have a clue. Indeed, most will use the results from a collection of "mental ability" tests spanning verbal, numerical, and abstract reasoning as a "measure" of "Intelligence" – because people in the real world usually equate "intelligence" with reasoning ability which allows a person process and understand information, and make better decisions. But clearly, as Sternberg and others have pointed out before us – specific mental abilities cannot be equated to intelligence in any straightforward manner.

And, as soon as you take an evolutionary perspective on constructs like intelligence or even Good Judgment, you realize that the "psychometric world" of mental abilities is almost distinct from how a scientist might want to investigate and explain a construct like intelligence. Not only that, the psychometric work seems almost devoid of explanatory content – or as Bob put it "social penetrance". I don't want to belabor this point – as the psychometricians have done us all a service by persisting with a good proposition beyond its capacity to yield any more knowledge (i.e. mental abilities are linear variables, whose relations between themselves and other real-world performance variables are also linear). But, one only has to read Gigerenzer, Todd and the ABC group book on Simple Heuristics (1999) , or the latest book by Gerd Gigerenzer himself (2007) on "Gut Feelings" that you realize something is very isolated and very peculiar about psychometric models of intelligence (or mental abilities), or indeed, the way "psychometricians" actually think about the variables they invoke so readily.

As a scientist, one thinks about phenomena, their qualities, attributes, and potential cause, and in the case of psychological phenomena, the system (i.e. the human being) which is part of the cause and the effect of a phenomenon. i.e. human beings are both recipients of cause – as well as initiators – sometime simultaneously. This is unlike the world of physics – where the objects under examination do not themselves decide of their own volition to cause phenomena.

But, large-scale systems, consisting of many discrete autonomous units, do appear to self-organize. Welcome to the world of Complexity theory – and biological self organization. This is a fact, not pseudo-science or New World hippie thinking – and was the second Big Idea. There is enough in the presentation notes to explain what it is, and why it is an important feature to consider when invoking explanatory variables in psychology (see pp. 11-15 of the notes).

Now one thing I haven't mentioned, because I have been mentioning this regularly over the past 8 years, was the fact that psychological measurement, or more properly psychometricians were regarded as methodologically thought disordered by Joel Michell (1997), whose exposition of the definition of quantitative measurement and "pathological science of psychometrics" (2000) still shines like a beacon for those who want to understand measurement from the ground up. And measurement does not equate to that awful disease which now afflicts most "quantitative" psychologists – "**Staticism**". The term introduced by Otis Duncan (1984) .. "*the notion that computing is synonymous with doing research; the naïve faith that statistics is a complete or sufficient basis for scientific methodology; the superstition that statistical formulae exist for evaluating such things as the relative merits of different substantive theories*". I could go on quoting Duncan but you get the message. He wrote this some 20 odd years ago.

So, let's tie this together:

- Psychologists when speaking to others about magnitudes of psychological variables, speak in terms of broad explanatory variables, the kinds of variables which explain real-world behaviors, in context, and usually in terms of orders (excellent, really good, average, poor) or classes (good/bad). That's why Bob and Joyce Hogan's work on socioanalytic theory, getting along, getting ahead, leadership, and good judgment is so readable, intuitive, and makes such good sense to listeners and clients.

- These same variables are fuzzy, imprecise, "common or garden constructs" (In Mike Maraun's (1998) terminology, and not obviously amenable to psychometric measurement as we know it.

- But, in the world of computer science, scientist build machines which exhibit "intelligence" – according to the something like the definition of computational intelligence from Poole et al (1998) – given in the Good Judgment paper. As we noted – this also seems like a good working definition for humans.

- Further, we now know that complex systems are self-organizing, exhibit emergence, and are intrinsically non-linear. The brain is an example of just such a system. We also know that biological systems like these tend to be adaptive to environmental stimuli, and evolve themselves over time. The consequence being that their outputs may be equi/multifinal (see the Two Big Ideas presentation notes p. 15) and approximated by linear methods, but are not simple linear combinations of magnitudes of variables.

- We know from Joel Michell that no psychological variables have as yet been show to possess a quantitative structure (i.e like length, weight, time etc.) – and that psychometricians simply assume this is the case in order to use certain classes of statistical and numerical manipulations of these variables.

- 50+ years of test theory has brought us what exactly? What do we know now that we didn't know 30 years ago? What astonishing fact have we discovered with SEM, MLM, HML, MIMIC models, IRT, MTMM, PLS, TETRAD, and all the other abbreviations for sophisticated statistical modeling of mostly self-report questionnaire data and some socio-educational-economic variables? Just compare this with progress in the world of neuroscience and genetics.

- Gerd Gigerenzer and colleagues at the Center for Adapative Behavior and Cognition have shown that the way we reason is not as exhaustive, rational, information processors – we use "fast and frugal heuristics". As a consequence, the amount of ability to do a specific "thing" may have little to do with decision-making in some contexts, because we are not "built" to function as exhaustive information processors in which "abilities" linearly combine equal-interval unit magnitudes of their specific processing/reasoning capacity to produce an outcome.

Now think about Bob's concept of Good Judgment and that notion of Clear Thinking. The only reason we are told we "can't" measure these is because those telling us are obsessed with thinking about constructs as though they were measuring a physical attribute like length, weight, temperature etc.

But, what if we propose that psychological variables, the really useful ones, are in fact the output from a non-linear, adaptive, self-organizing system? They are fuzzy, impossible to constrain with a precise technical definition, their causes "complex" and equifinal (***Equifinality*** *is the ability to reach similar outcomes or end states from different starting points and through different processes*) and in reality their magnitudes can only be expressed as orders or perhaps only classes in some cases (OK/not OK).

In short, we look at psychology as a non-quantitative science. That is, magnitudes of psychological variables can only be resolved to orders, not precise unit—preserving equal-intervals. Likewise, certain kinds of criterion variables, especially those involving human judgments of performance or outcomes, can also be proposed as being resolvable only to orders or class of magnitudes. Why should we imagine that a supervisor rating of job performance is a linear, equal-interval judgment? These judgments are the same fuzzy combination of many factors, only some of which are probably considered relevant by that individual, in coming to a rating about performance of another.

And "fuzzy" does not mean hopelessly inaccurate. That the human race has evolved and survived successfully is a testament to the fact that fuzzy systems and fuzzy-logic work very well – when survival decisions are required to be "Good Enough" rather than the result of incremental linear processing of information (emotional or otherwise).

But, "fuzzy" does mean that any predictions we make, and the measurements we make of psychological variables, will be imprecise when compared to measures of, or predictions made, with physical variable measures such as time, absolute temperature etc., However, they can paradoxically be **precise** when considered with regard to predicting criterion outcomes which are assessed in terms of orders like "high, average, and low performance". Likewise the assessment of a psychological variable like Good Judgment; maybe we really can only reasonably cluster individuals in a few ordered ranges – rather than artificially use an "IQ" score range of 0 to 200+ in 1-unit integer increments?

Predictions using such fuzzy variable assessment variables are expected to be precise, **relative to a criterion which is not "precise" in the "equal-interval" sense of "precise", but which is "precise" when considering how we make judgments about performance or attributes of people in the real world**. For example, we might not be able to measure "good judgment" as an integer-unit equal-interval variable, but we can tell you whether or not someone is/has displayed it. Knowing that alone is hugely important for corporate and senior business executives who know the value of Good Judgment (think about that Nutt article (Nutt, P.C. (1999) "*Surprising but true: Half the decisions in organizations fail*" - and then hopefully you'll see the relevance of what we are talking about here).

And, behavioral outputs are clearly sufficiently stable, classifiable, and can be ordered in some cases, but their causes seem to be dynamical and equifinal. Which means it is unlikely from first principles that methods such as SEM or linear regression analysis will ever untangle the causal "paths". Indeed, such "untangling" may never be possible. That doesn't mean we cannot continue investigating psychology as a science. It just means we need to take notice of how behaviors might be generated – and what this means for how we construe explanations and predictions, and predictive accuracy.

And yes, there are lots of issues associated with this new approach. That's science for you. It doesn't come shrink-wrapped like the courses and text-books of quantitative psychology.

The "big theoretical picture" into which we can slot our new way of thinking and working is that presented by Werner Wittman, in his work on Brunswik Symmetry. Egon Brunswik (1952, 1955) proposed a model for describing the relations between the environment and the behavior of organisms in the environment. The original 1952 Brunswik lens model is pictured below:
(from Bernhard Wolf … http://www.brunswik.org/notes/WolfOriginalLens2005.pdf)

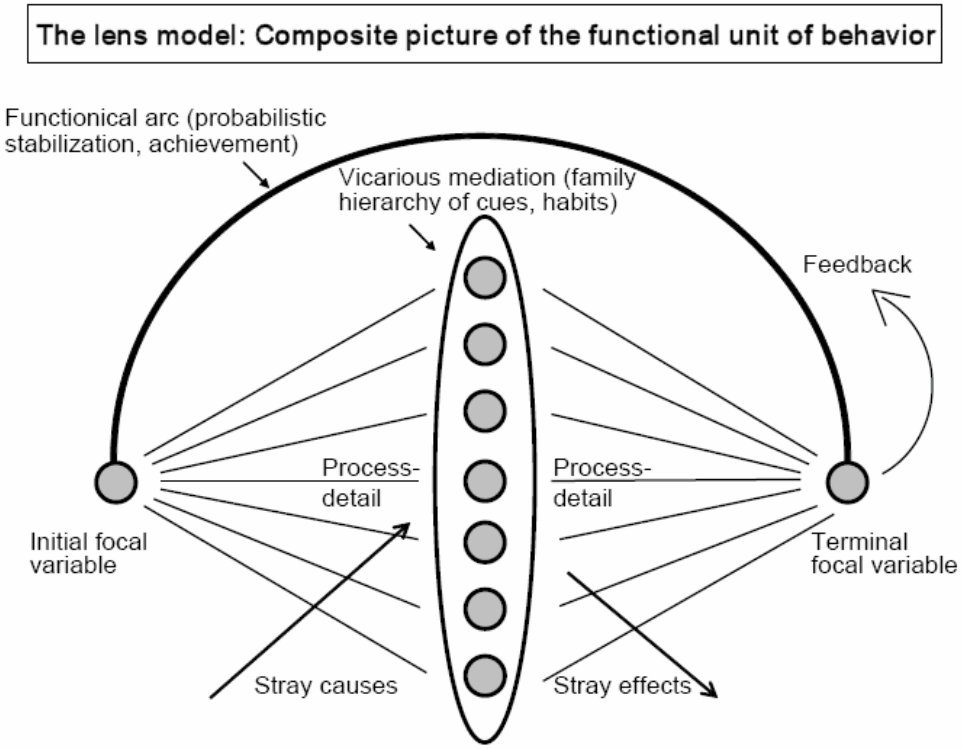

It's called the lens model because it looks a little bit like light passing through a convex lens. The idea in a nutshell is that an organism perceives the world through a kind of lens. Stimuli from the environment enter this "perceptual lens", are processed by the organism, and some kind of behavioral output is produced. The model is accounting for judgments made by an organism – where distal (focal) and detailed environmental stimuli/cues are processed by an organism which applies "proximal" processes to yield distal/focal behaviors or outcomes. This perception or judgment is said to be achieved by the organism combining the proximal cues in some manner, so as to infer the status of the distal/focal stimulus.

What Werner did was elaborate on the calculus inherent in this model, by proposing a set of symmetry-relations between the environment and organism variables/processes – and further extending the analogy to explain expected symmetry-effects in predictor-criterion relations.

Let's look at a prototypical slide from one of Werner's presentations

Work motivation and level of performance: A disappointing relationship?
Presented: XXV International Congress of Applied psychology Singapore, July 2002 at the Symposium "Integrative Approaches to Work Motivation: Ability and Non-ability Determinants of Regulatory Processes, Learning, and Performance" (organized by Ruth Kanfer).

See also:
Brunswik-Symmetry: A key concept for successful assessment in education and elsewhere
Presented at the 4th Spearman Conference (ETS) in Philadelphia, Oct. 20-23, 2004

This Brunswick Symmetry master slide (#1) is taken from a presentation given by a very clever man – Werner Wittman.
Download @: http://www.psychologie.uni-mannheim.de/psycho2/psycho2.en.php3?page=publi/papers.en.htm&cat=publi

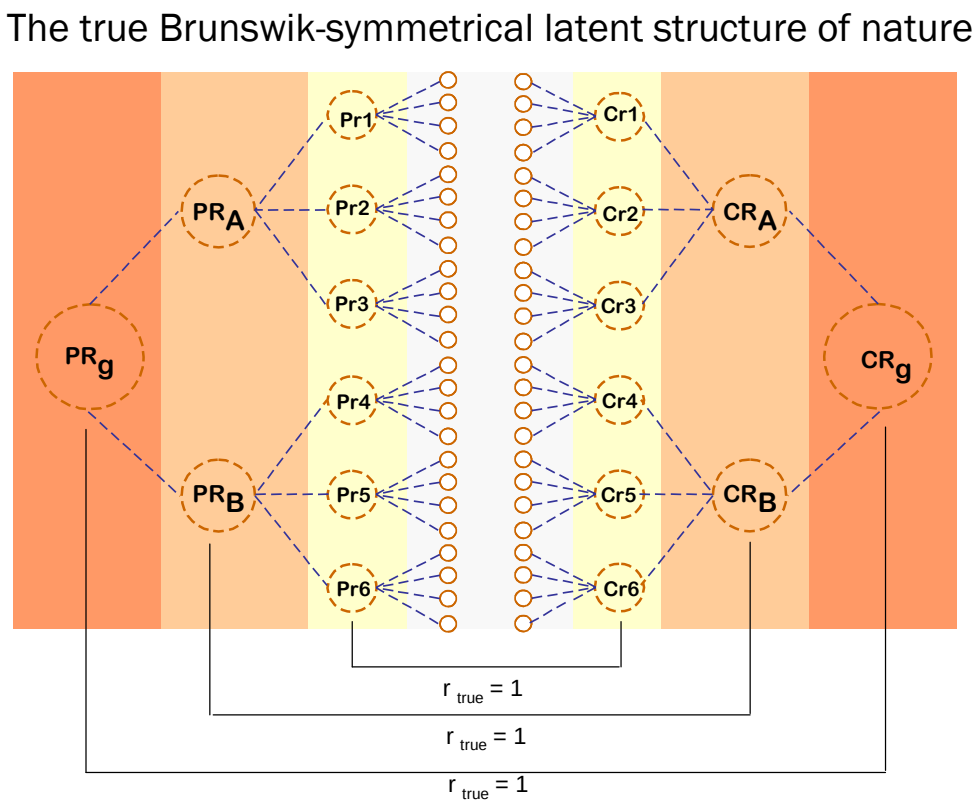

From the Word document downloadable from the same site …

"This figure depicts hierarchical predictor (Pr) and criterion (Cr) models and one immediately sees, that predictability is at its maximum, when we relate both at the right level of aggregation and generality. Symmetry in amount of aggregation and symmetry in level of generality should boost predictability. Fishbein and Ajzen (1975) had been among the first to hint to these problems in attitude research and Ajzen (1988) in personality research. They coined these as principles of correspondence. They distinguished between single and multiple act criteria, pointed to the necessity of distinguishing between action, target, time and context and where able to demonstrate higher predictions when these elements corresponded to the criteria chosen."

Let's make crystal clear that the variables being used within this model are like little rulers – equal-interval measures, manipulated using linear statistical operations like multiple regression and Pearson correlations. The augmented figure below shows the rulers.

The true Brunswik-symmetrical latent structure of nature, with the linearity and assumed ruler-type length measurement superimposed on each variable.

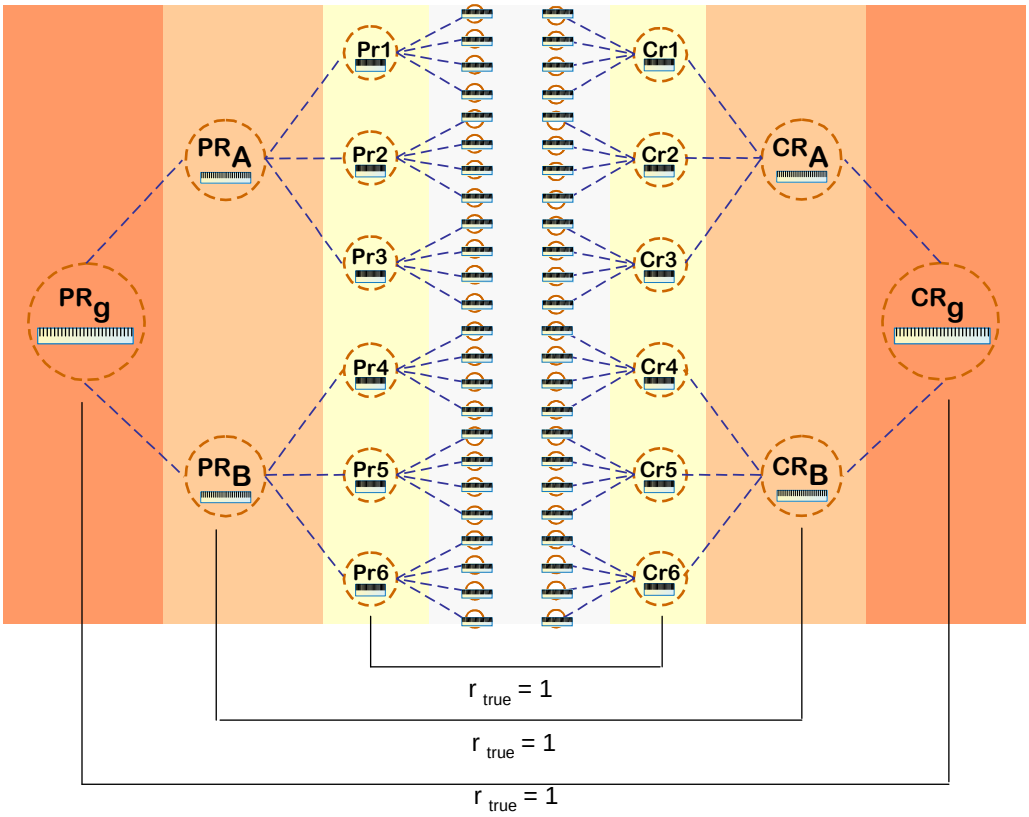

Now, what we are doing in our new approach is removing the notion that the links between variables are linear, and that any variable might be measured as though it was quantitative. We keep the symmetry model intact – as this makes a great deal of sense, but we postulate that the predictor variables (psychological variables) are no longer measurable linearly, and that they combine amongst one another in ways which are intrinsically non-linear.

What the diagram below is showing is the same symmetry arrangement, but variables are "measured" as ordered or unordered classes, and combinations of variables are highly interconnected to produce a "higher-level" variable. So, no more rulers; instead, we have classes – perhaps ordered – as depicted by the colored bars denoting the output from a complex interconnected system.

The more likely Brunswik-symmetrical latent structure of nature. Not necessarily linear, not necessarily quantitative, unknown maximal agreements.

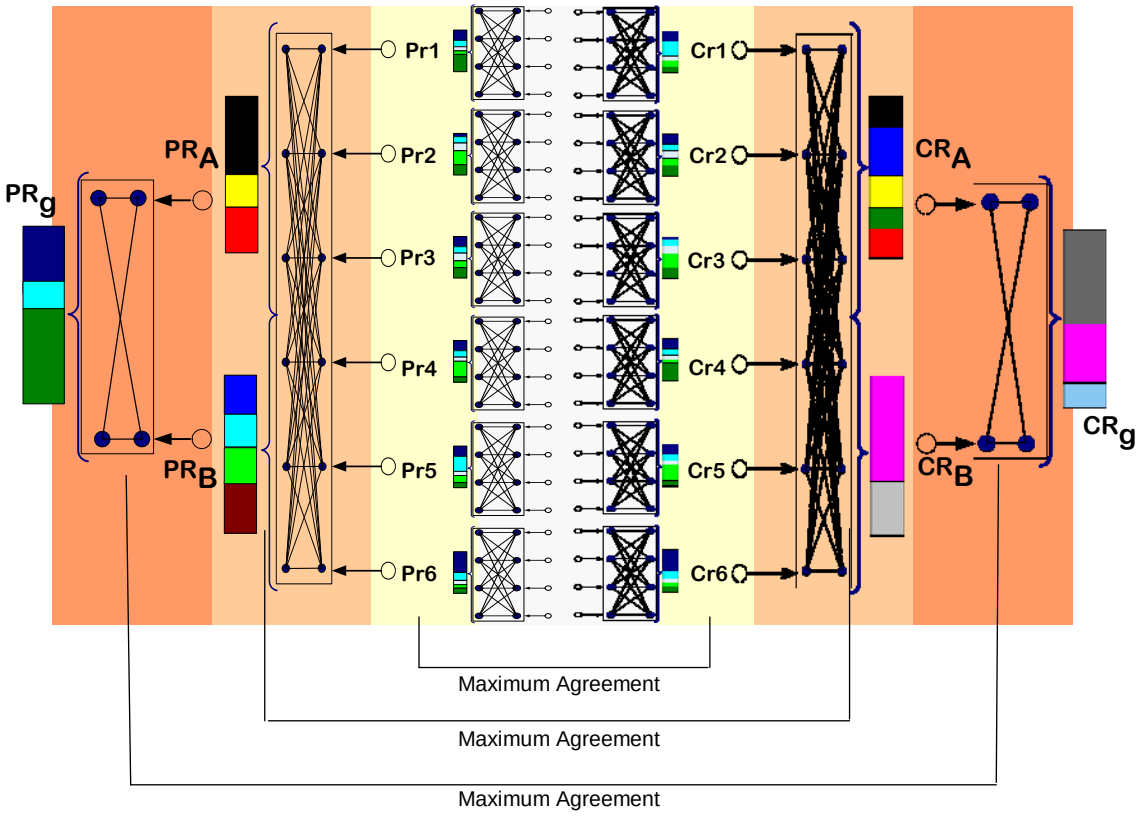

Now, it's possible that lower–level variables might indeed be linear or as "near as dammit" – as modeled by psychometricians. But, as you begin to combine variables to produce more broad constructs, it is proposed that that linkage between the lower-level constituents and the next level variable is complex and non-linear. And that non-linearity is at the individual "person" level – remember **equifinal** outcomes. Variability is thus seen as "person" variability rather then measurement error (as Jim Lumsden first conceptualized in 1978 in his paper "*Test are perfectly reliable*"). And note, we cannot say "r=1" between symmetric predictors and criteria as the variables can no longer be considered linearly equated. We just expect "maximal agreement".

On the next page, is the graphical schematic of the enormity of interconnectedness with which we are probably dealing with. When we combine variables such as Tactical ,Strategic Reasoning, and Personality to produce "Good Judgment", our model proposes that the interconnectivity between the constituents of these constructs is perhaps as complex as that shown in the diagram. And note that each sub-component of each major component is also potentially constituted of highly connected variables. Indeed, a neural net approach which embodies this high degree of connectivity might actually be the optimal way of combining personality and intelligence variables so as to produce an ordered Good Judgment measure. Ordinarily we might use SEM or regression or some other linear combination to do this.

In the end, as noted in the presentation Two Big Ideas, it will be theoretically-meaningful predictive accuracy which is the final arbiter of these two fundamental paradigms to approaching the measurement/assessment of magnitudes on psychological variables.

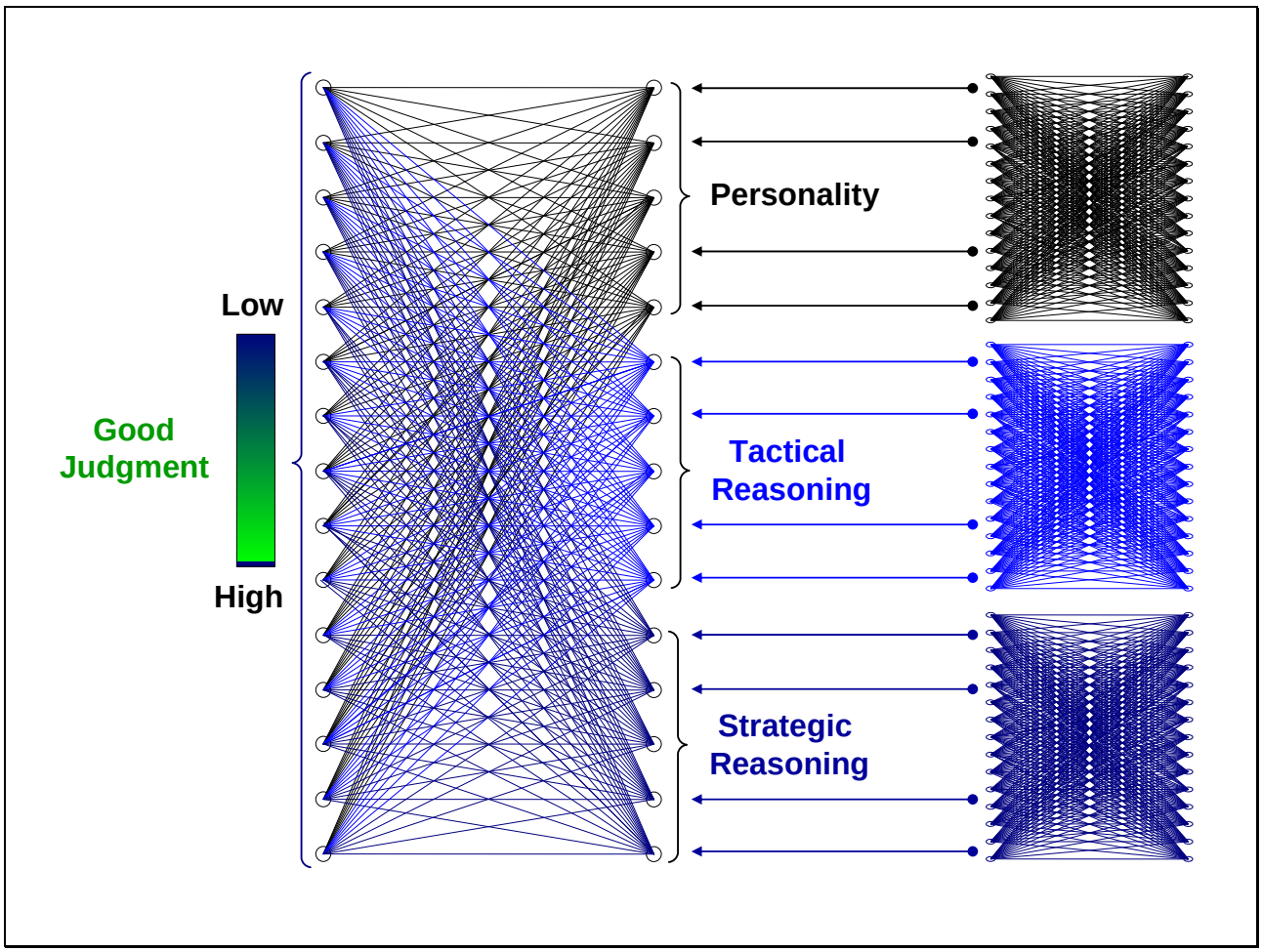

The current approach to psychological investigation assumes quantitatively structured variables, proposes to measure hypothetical latent variables with near-perfect accuracy (once adjusted for measurement error and other sources of error), is data-model driven, and uses predominantly linear statistical and mathematical models to account for variable relationships. It reifies linear methodology. It takes no account of what we now know about human brain, evolutionary neuroscience, and the axioms of quantitative measurement. Its proponents assume ever more complex mathematical and statistical tools will achieve greater measurement and predictive accuracy of phenomena.

Our approach puts the phenomena first and foremost. It is consistent with what we now know about how the human brain functions, and why (from an evolutionary perspective). It makes no assumptions about the quantitative structure of variables, and its methods of analysis are entirely suited to the kinds of accuracies theoretically realizable when dealing with the outputs of non-linear adaptive systems (us). It has the option of modeling via linear or intrinsically non-linear methods, or a mixture of each. What drives this approach is theory, utility, and predictive accuracy. It is at once highly pragmatic yet embedded in theory. It is an attempt at a non-quantitative science of psychology. The practical goal – to get predictive accuracies into levels thought "impossible" by those who assume psychology is a quantitative science.

If the quantitative psychologists are right, then it's just a matter of time before innovative mathematics and quantitative methodology gets us to the next level of understanding and prediction. If Michell, Schonemann, Wolfram, and complexity theory are correct, then we are dealing with a system whose outputs can only be approximated by conventional linear mathematics and statistics – and that level of approximation was probably reached some 20 years or so ago.

References

Brunswik, E. (1952). *The conceptual framework of psychology*. (International Encyclopedia of Unified Science, Volume 1, Number 10.) Chicago: The University of Chicago Press.

Brunswik, E. (1955). Representative design and probabilistic theory in a functional psychology. *Psychological Review*, 62, 193-217.

Duncan, O.D. (1984) Notes on Social Measurement. New York: Sage.

Gigerenzer, G. (2007) *Gut Feelings: The Intelligence of the Unconscious*. New York: Viking Press.

Gigerenzer, G., & Todd, P.M. (1999) *Simple Heuristics that Make US Smart*. Oxford UK: Oxford University Press.

Lumsden, J. (1978) Tests are perfectly reliable. *British Journal of Mathematical and Statistical Psychology*, 31, 1, 19-26.

Maraun, M.D. (1998) Measurement as a Normative Practice: Implications of Wittgenstein's Philosophy for Measurement in Psychology. *Theory & Psychology*, 8(4), , 435-461.

Michell, J. (1997) Quantitative science and the definition of measurement in Psychology. *British Journal of Psychology*, 88, 3, 355-383.

Michell. J. (2000) Normal science, pathological Science, and psychometrics. *Theory and Psychology*, 10, 5, 639-667.

Nutt, P.C. (1999) Surprising but true: Half the decisions in organizations fail. *Academy ol Manaqemenl Executive*, 13, 4, 75-90.

Poole, D., Mackworth, A., & Goebel, R. (1998) *Computational Intelligence: A Logical Approach*. Oxford University Press.

Schonemann, P. (1994) *Measurement: the Reasonable Ineffectiveness of Mathematics in the Social Sciences*. In I. Borg and P.Mohler (Eds.). Trends and Perspectives in Empirical Social Research. Walter de Gruyter.

Sternberg, R.J. (1997) The concept of intelligence and its role in lifelong learning and success. *American Psychologist*, 52, 10, 1030-1037.

Sternberg, R.J., Grigorenko, E. (2007) The difficulty of escaping preconceptions in writing an article about the difficulty of escaping preconceptions: commentary on Hunt and Carlson (2007). *Perspectives on Psychological Science*, 2, 2, 221-223.

Wolfram, S (2002) *A New Kind of Science*. Wolfram Media Inc.. ISBN: 1-57955-0088.